OVERALL ASSEMBLY DIMENSIONS:

EXTERNAL - 99 x 52 x 28

INTERNAL - 71.75 x 45.5 x 25

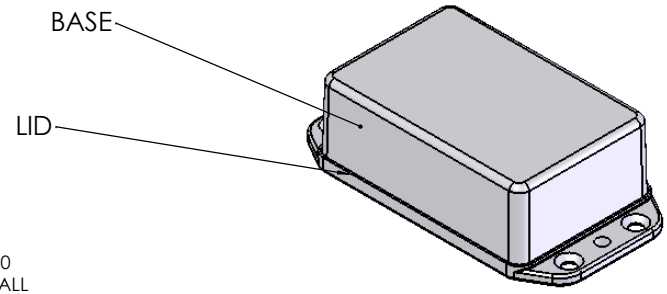

ISO VIEW
1:2

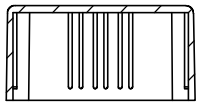

SECTION C-C

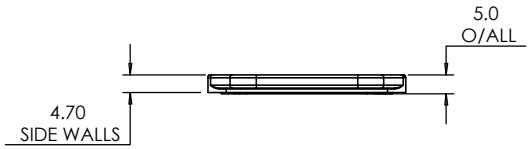

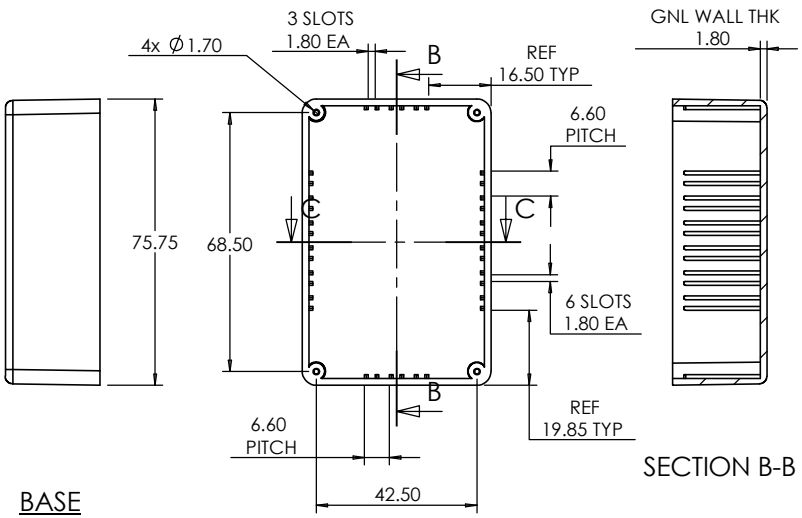

BASE

SECTION B-B

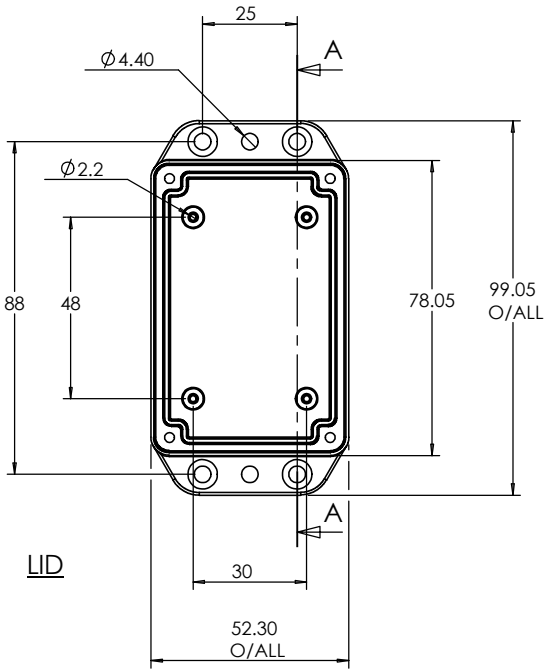

LID

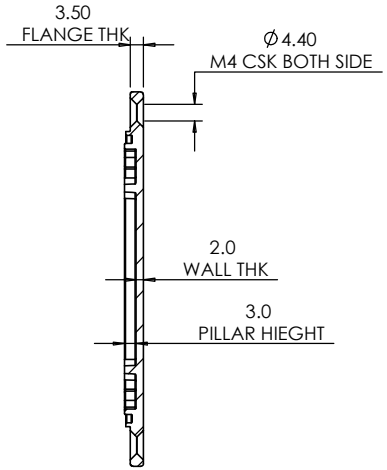

SECTION A-A

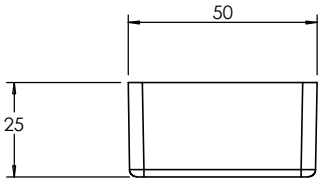

CAMDENBOSS
JAMES CARTER RD, MILDENHALL, SUFFOLK. IP28 7DE
TEL: 01638 716101 FAX: 01638 716554
EMAIL: Sales@CamdenBoss.com
WEB: www.CamdenBoss.com

	NAME	SIGNED	DATE
DRAWN	S.HARDINGE	SJH	11/11/08
CHK'D	-	-	-

UNLESS OTHERWISE SPECIFIED: DIMENSIONS ARE IN MILLIMETERS

FINISH. SMOOTH

MATERIAL. ABS

PROJECTION.

DO NOT SCALE DRAWING

REVISION. O

TITLE: GNL ASSY DRG FOR IP 2000-SERIES ENCLOSURE

DWG NO. 2000-IP

A4

SCALE. 1 : 2

SHEET 1 OF 1